IMPORTANT PLEASE NOTE: All publications located within the Planning and Growth Management section of the web site are believed to be accurate as of their posting date. However, they may not be accurate on the day you view them. To verify whether these documents are the most current official document, please contact the division associated with the document in question.

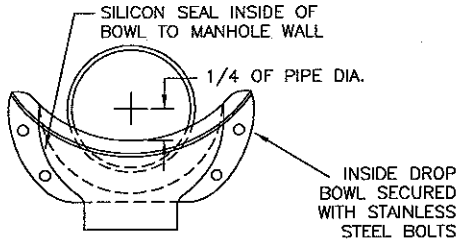

DROP BOWL MOUNTING POSITION

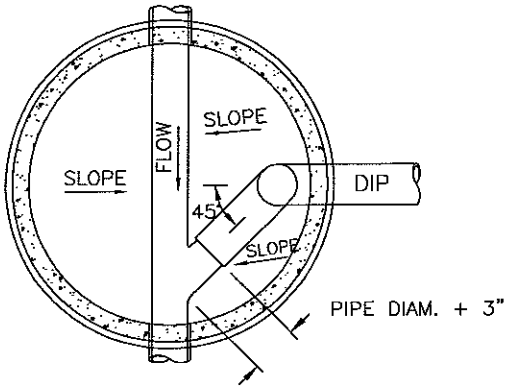

SECTION C–C

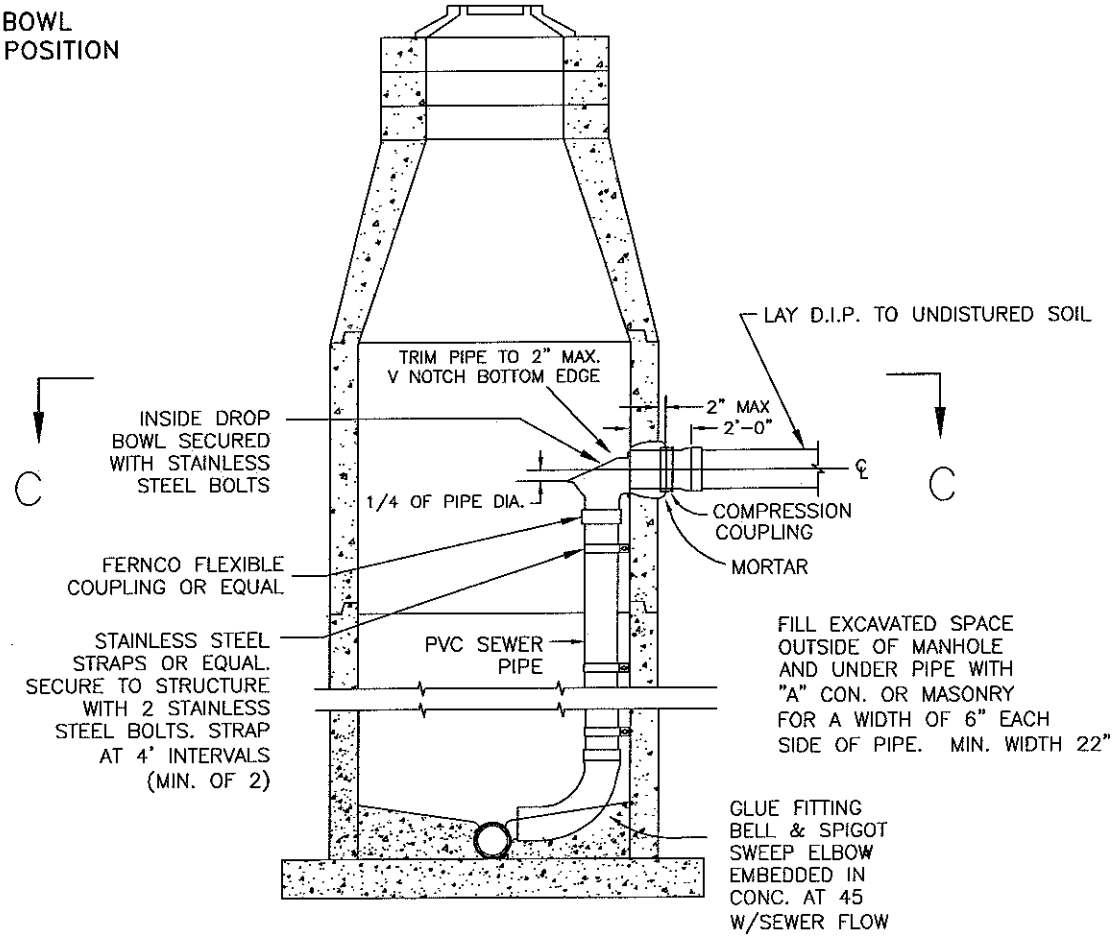

NOTE:

1. ALL INSIDE DROP CONNECTIONS FOR SERVICES AND COLLECTOR SEWERS SHALL USE THE DROP BOWL AS PRODUCED BY RELINER–DURAN, INC., OR APPROVED EQUAL.
2. SECURE DROP PIPE TO MANHOLE WALL WITH RELINER–DURAN, INC STAINLESS STEEL ADJUSTABLE CLAMPING BRACKETS, OR APPROVED EQUAL.

CHARLES COUNTY GOVERNMENT	STANDARD DETAIL	REVISIONS:	
DEPARTMENT OF PLANNING & GROWTH MANAGEMENT		APRIL 14, 2014	S
APPROVED: 4-17-14 CHIEF OF CODES, PERMITS, & INSPECTION SERVICES — DATE	INSIDE DROP MANHOLE CONNECTION		1.06
04/14/14 WATER/SEWER ENGINEER — DATE			