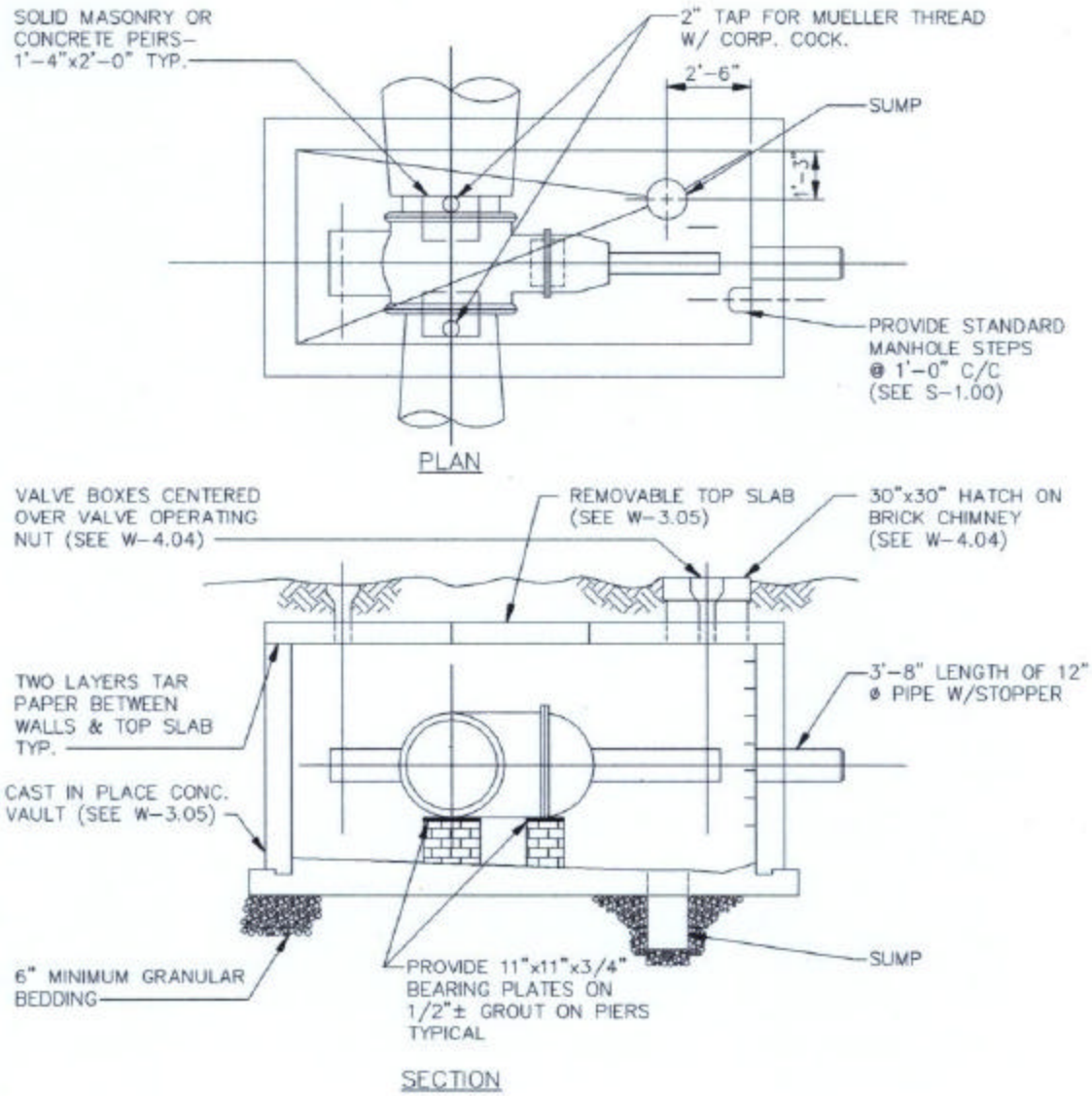

NOTE:

1. VAULTS FOR ELECTRICALLY OPERATED VALVES SHALL BE BUILT WATERTIGHT, SUBMIT DETAILS FOR REVIEW.
2. CONTRACTOR MAY USE PRECAST CONCRETE VAULT. SEE SPECIFICATION FOR SUBMITTAL REQUIREMENTS.

CHARLES COUNTY GOVERNMENT DEPARTMENT OF PLANNING & GROWTH MANAGEMENT APPROVED: DIRECTOR OF DEVELOPMENT SERVICES DATE 6/28/95 WATER / SEWER ENGINEER DATE 6/29/95	STANDARD DETAIL VALVE INSTALLATION	REVISIONS:	W / 3.04