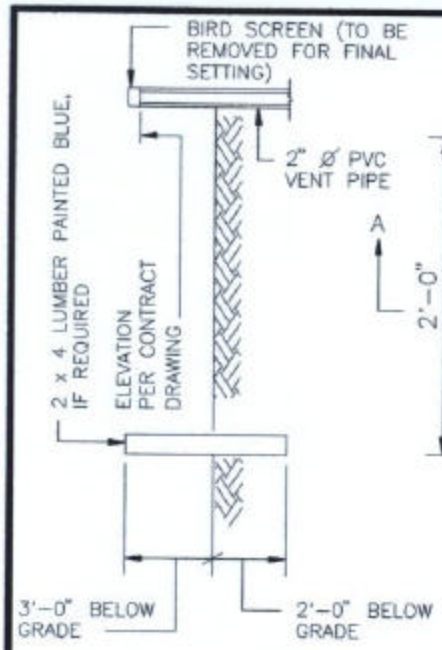

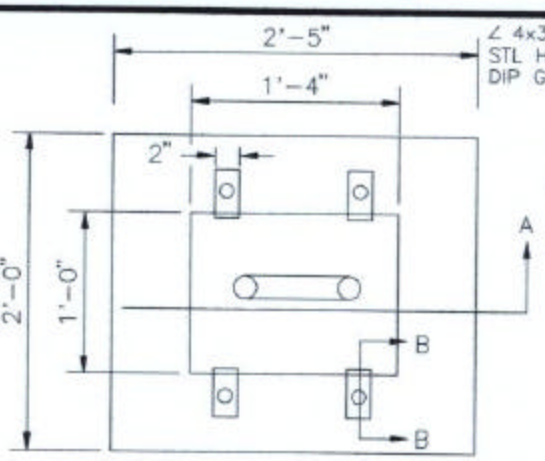

PLAN

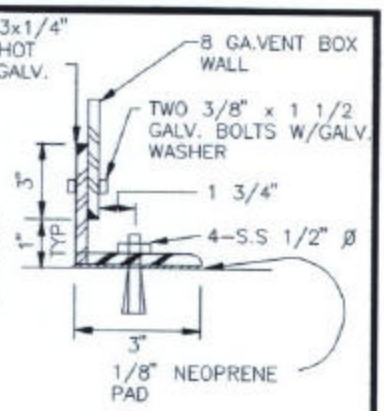

SECTION B – B

1. ALL WORK SHALL BE DONE IN CONFORMANCE WSSC STANDARD SPECIFICATION SECTION 05120
2. ALL WELDED JOINTS SHALL BE CONTINUOUS COMPLETE PENETRATION WELDS.
3. THE BOX ASSEMBLY SHALL BE HOT DIP GALVANIZED AFTER FABRICATION.

GRADE CONCRETE PAD TOWARDS SLOTS FOR POSITIVE DRAINAGE

SPECIFY ELEVATION ON CONTRACT DRAWINGS IN FLOOD PLAINS, THE VENT SHALL BE 1'-0" MINIMUM ABOVE THE 100-YEAR FLOOD ELEVATION.

IN AREAS UNDER DEVELOPMENT THIS SECTION OF 2' PIPE TO BE INSTALLED BY THE PIPELINE CONTRACTOR AS SHOWN IN THE ABOVE DETAIL. OTHER WORK SHOWN ON THIS DETAIL WILL BE INSTALLED BY THE DEVELOPER'S CONTRACTOR. IN ALL OTHER AREA'S THE ENTIRE SETTINGS AS SHOWN ON THIS DETAIL TO BE INSTALLED BY THE PIPELINE CONTRACTOR.

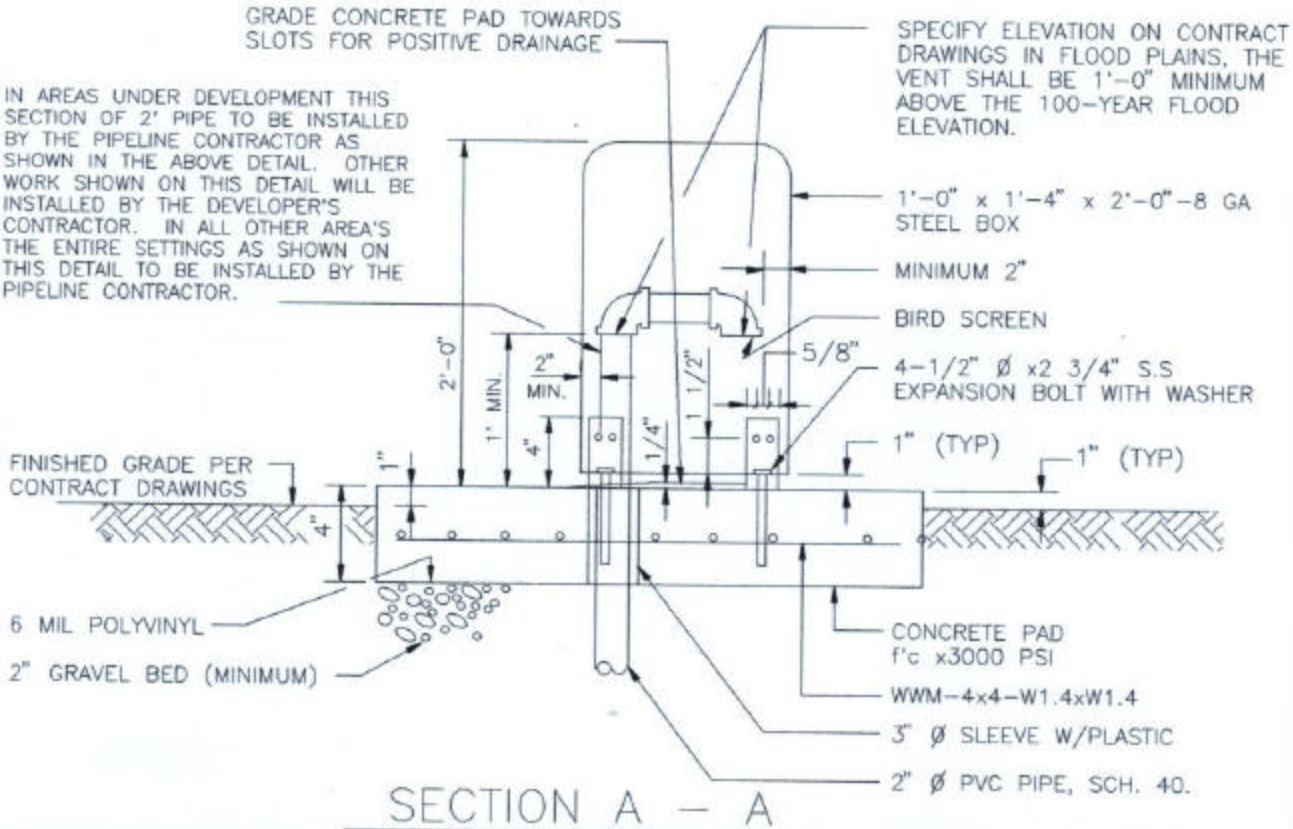

SECTION A – A

CHARLES COUNTY GOVERNMENT DEPARTMENT OF PLANNING & GROWTH MANAGEMENT APPROVED: 6/29/95 DIRECTOR OF DEVELOPMENT SERVICES DATE 6/29/95 WATER / SEWER ENGINEER DATE	STANDARD DETAIL VENT BOX FOR EXTENDED AIR RELEASE PIPE	REVISIONS:	W 3.09