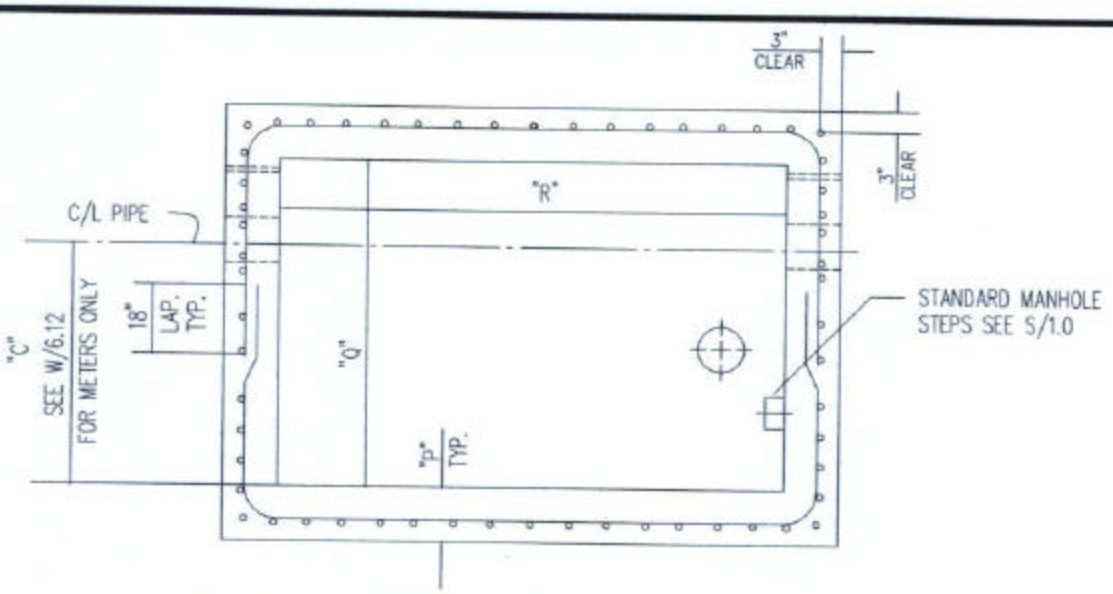

PLAN OF VAULT – TOP SLAB REMOVED

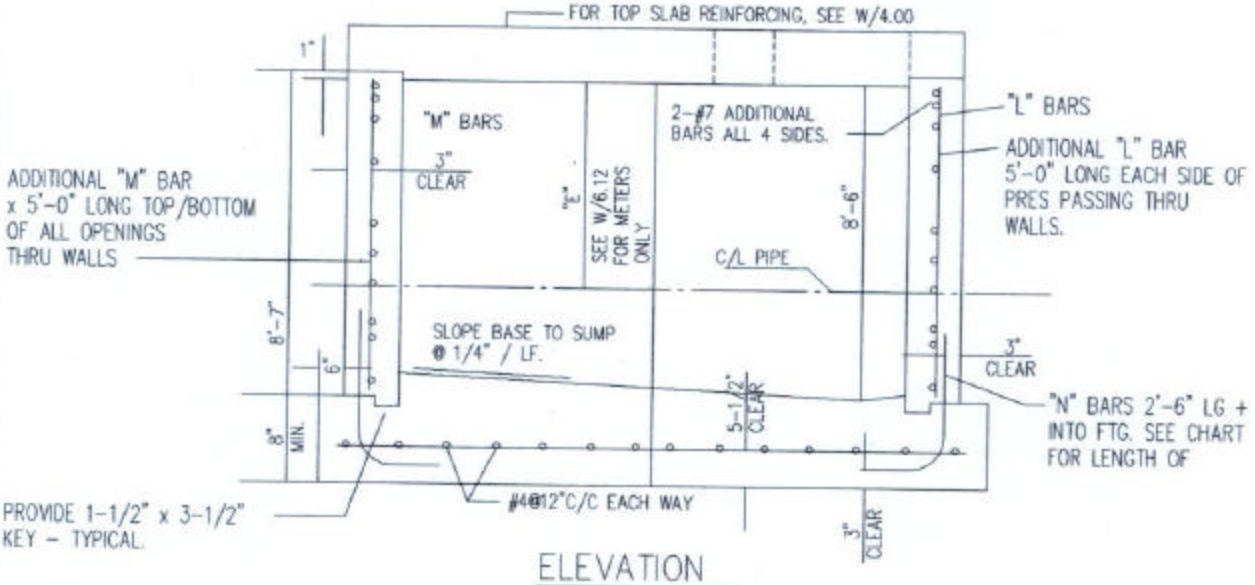

ELEVATION

"P"	"Q"	"R"	"L"	"M"	"N"
8"	6'-0"	6'-0"	#4@12"	#4@12"	#5@12" + 2'-0"HK
8"	6'-0"	8'-0"	#4@12"	#4@12"	#5@12" + 3'-0"HK
8"	6'-0"	10'-0"	#4@10"	#4@12"	#5@12" + 3'-0"HK
8"	8'-0"	8'-0"	#4@10"	#4@12"	#5@10" + 3'-0"HK
8"	8'-0"	10'-0"	#4@ 8"	#4@12"	#5@ 8" + 3'-0"HK
8"	8'-0"	12'-0"	#4@ 6"	#4@12"	#5@ 6" + 4'-0"HK

NOTES:

1. SEE W/3.05 NOTES (1) THRU (4) FOR ADDITIONAL INFORMATION.
2. SEE W/6.12 FOR METER VAULT SIZE REQUIRED AND METER INSTALLATION DETAILS.

CHARLES COUNTY GOVERNMENT
DEPARTMENT OF PLANNING & GROWTH MANAGEMENT
APPROVED: 6/29/95
DIRECTOR OF DEVELOPMENT SERVICES DATE
6/29/95
WATER / SEWER ENGINEER DATE

STANDARD DETAIL

CAST IN PLACE CONCRETE VAULTS FOR METERS & VALVES

REVISIONS:

W
4.02