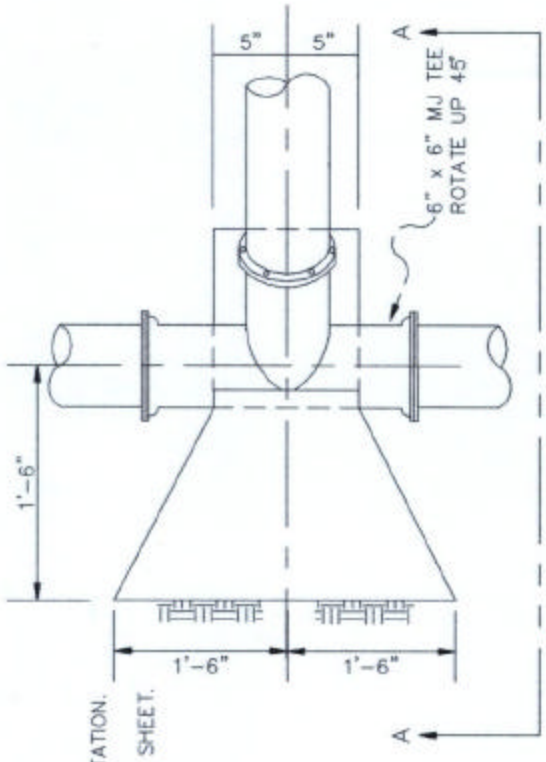

PLAN

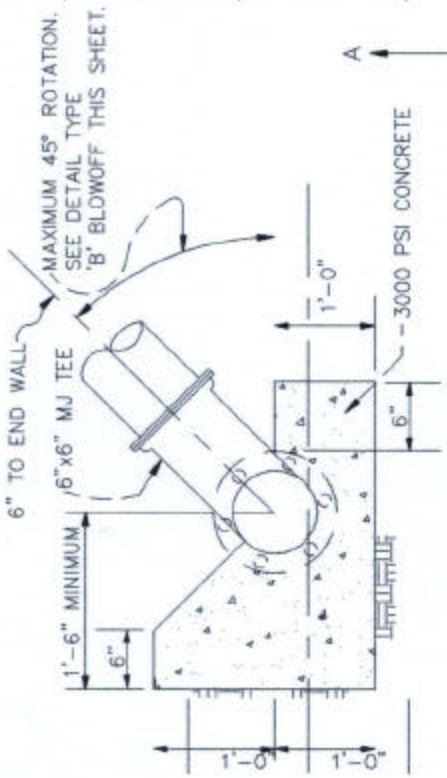

SECTION 'A-A'

NOTE: CONFIRM SUBGRADE CARRY ALL BEARING SURFACES TO UNDISTURBED GROUND

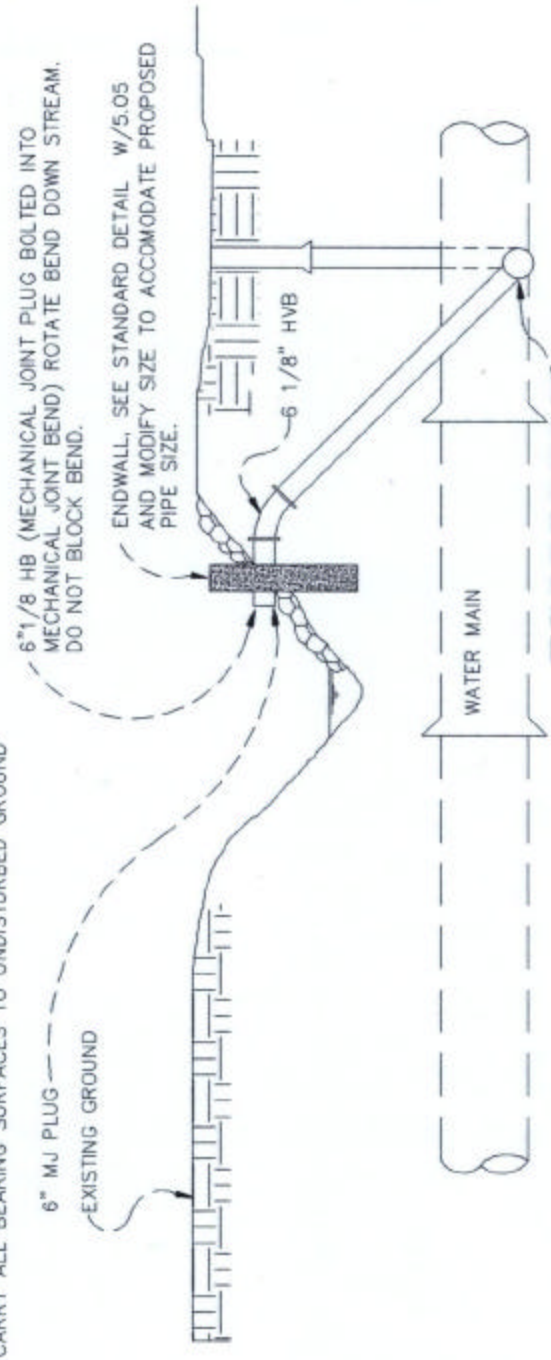

TYPICAL PROFILE FOR MODIFIED TYPE 'B' BLOWOFF-FOR MAINS 36" AND LARGER

CHARLES COUNTY GOVERNMENT DEPARTMENT OF PLANNING & GROWTH MANAGEMENT APPROVED: 6/29/95 DIRECTOR OF DEVELOPMENT SERVICES DATE 6/29/95 WATER / SEWER ENGINEER DATE	STANDARD DETAIL MODIFIED TYPE "B" BLOW OFF FOR MAINS 36" AND LARGER	REVISIONS:	W 5.04